GIZMO'S

BUMBLE JUMBLE

Help "Bee Gizmo" unscramble these words.

HE IS RISEN

SUJES	
RAYM	
SNEOTMBTO	
SERIN	
SICDIPLES	

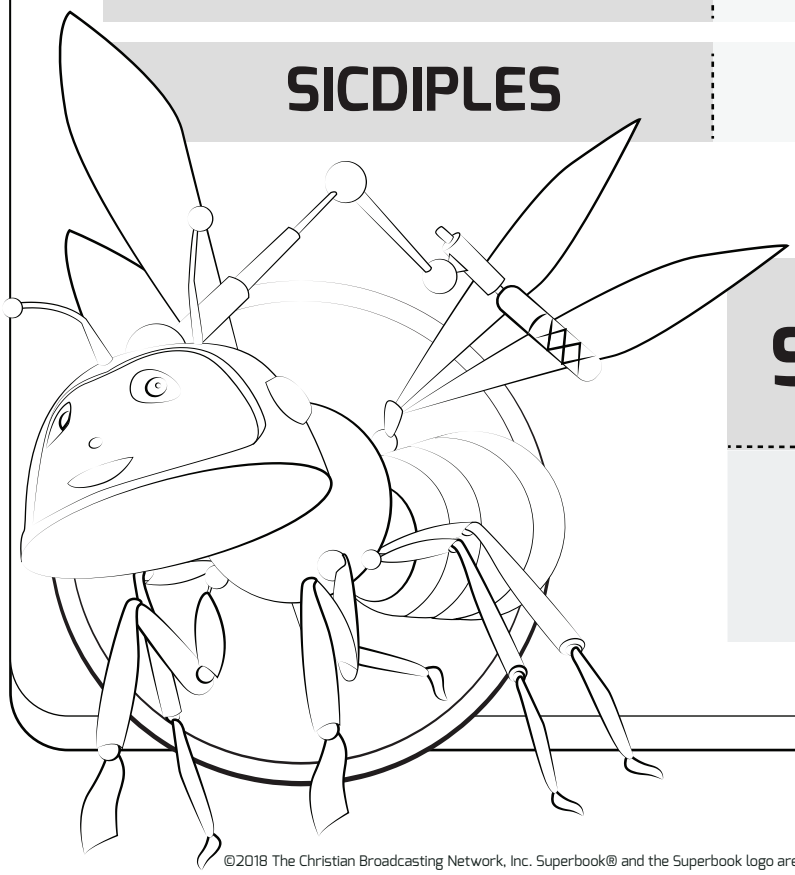

BONUS BUMBLE

SIOECRESTURN

©2018 The Christian Broadcasting Network, Inc. Superbook® and the Superbook logo are registered trademarks of The Christian Broadcasting Network, Inc.
The characters in Superbook including Joy, Chris and Gizmo are trademarks of The Christian Broadcasting Network, Inc. All rights reserved.

He is Risen Coloring Sheet

©2017 The Christian Broadcasting Network, Inc. Superbook® and the Superbook logo are registered trademarks of The Christian Broadcasting Network, Inc.
The characters in Superbook including Joy, Chris and Gizmo are trademarks of The Christian Broadcasting Network, Inc. All rights reserved.

He is Risen Maze

FINISH

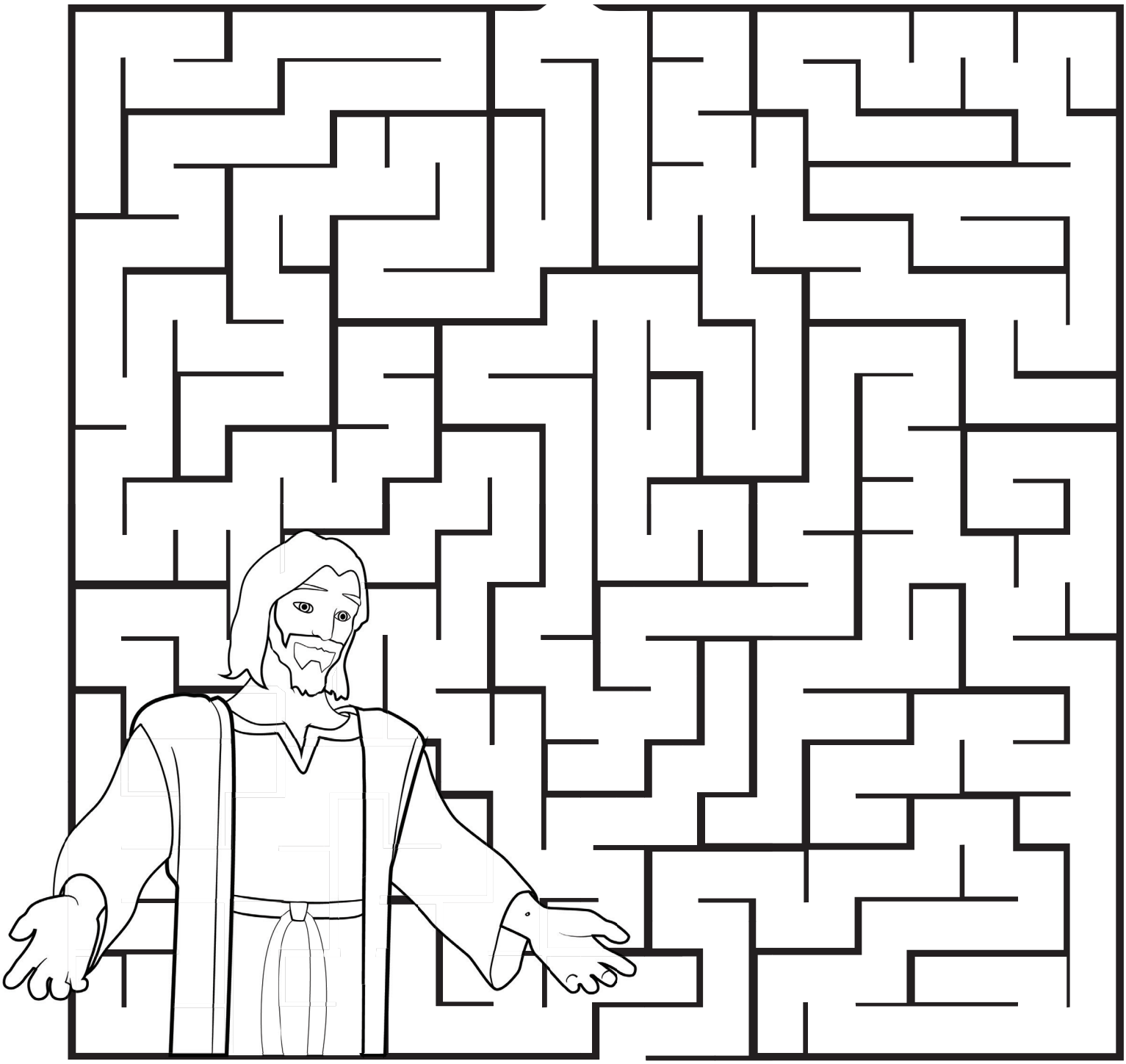

START

©2018 The Christian Broadcasting Network, Inc. Superbook® and the Superbook logo are registered trademarks of The Christian Broadcasting Network, Inc.
The characters in Superbook including Joy, Chris and Gizmo are trademarks of The Christian Broadcasting Network, Inc. All rights reserved.

HE IS RISEN

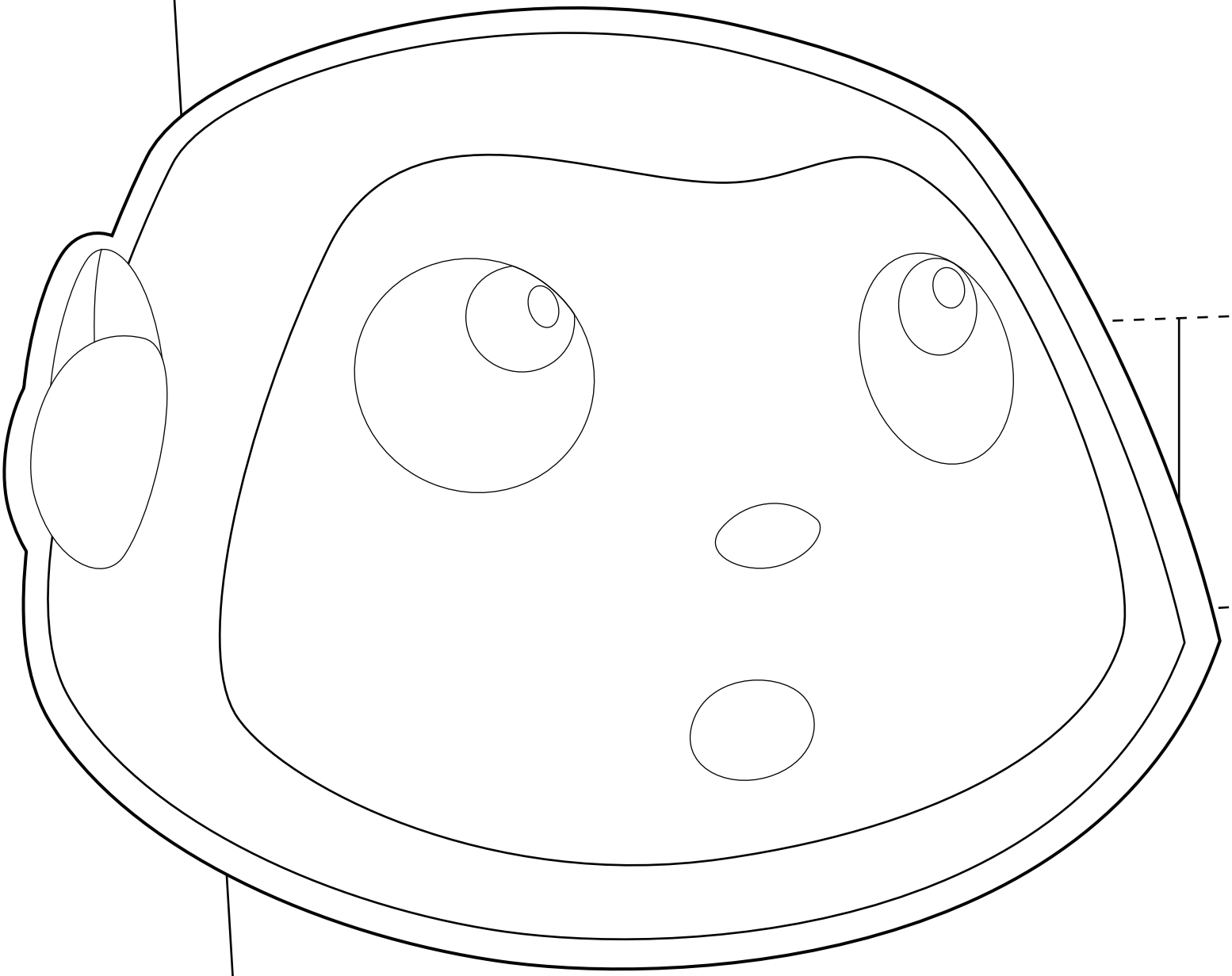

STEM ACTIVITY

©2018 The Christian Broadcasting Network, Inc. Superbook® and the Superbook logo are registered trademarks of The Christian Broadcasting Network, Inc.
The characters in Superbook including Joy, Chris and Gizmo are trademarks of The Christian Broadcasting Network, Inc. All rights reserved.

WHAT YOU NEED

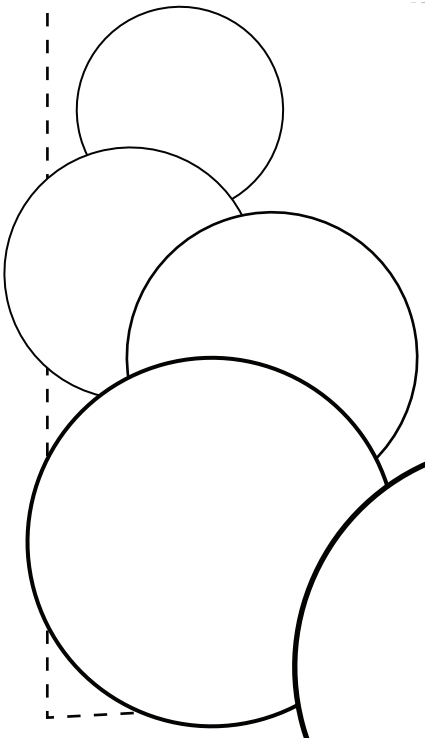

PING PONG BALLS
One for each person doing the activity and some extra's.

BENDING STRAW
One for everyone participating.

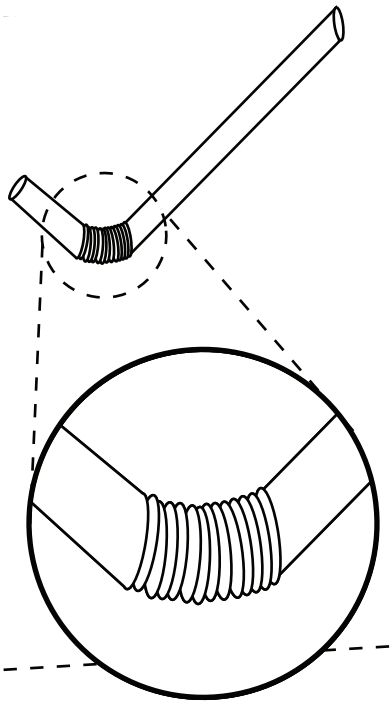

DIRECTIONS

STEP 1
Bend a straw so it is pointed upwards.

STEP 2
Place the ping-pong ball at the end of the straw and blow through the other end of the straw.

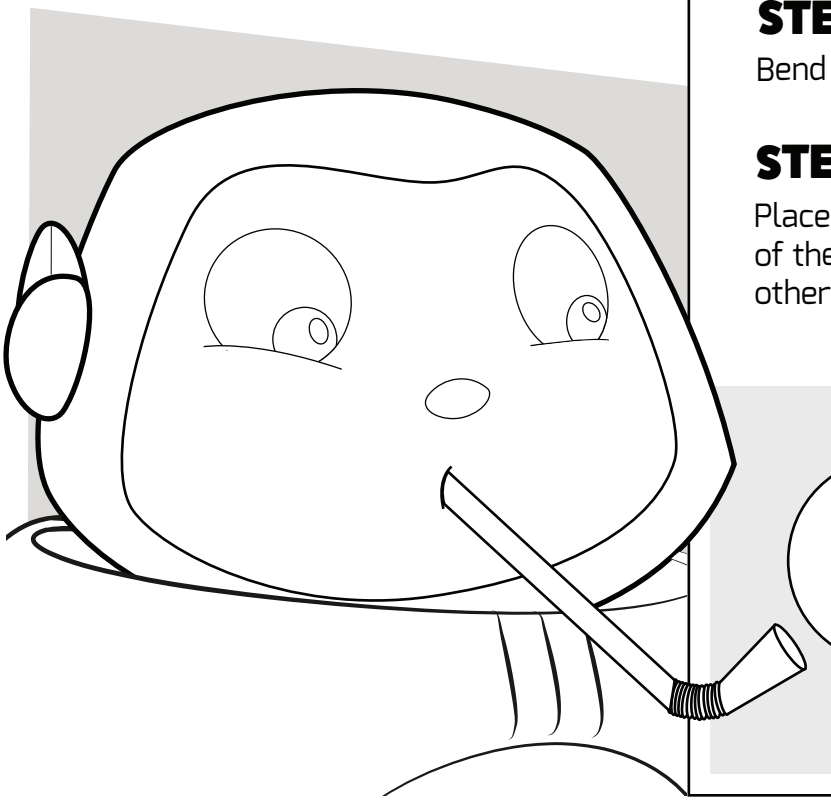

WHAT'S GOING ON?

Something unexpected happens!

What did you think the ping-pong ball was going to do?

What actually happened?

©2018 The Christian Broadcasting Network, Inc. Superbook® and the Superbook logo are registered trademarks of The Christian Broadcasting Network, Inc.
The characters in Superbook including Joy, Chris and Gizmo are trademarks of The Christian Broadcasting Network, Inc. All rights reserved.